Square Glass Serve - Over
(Sardis 2)

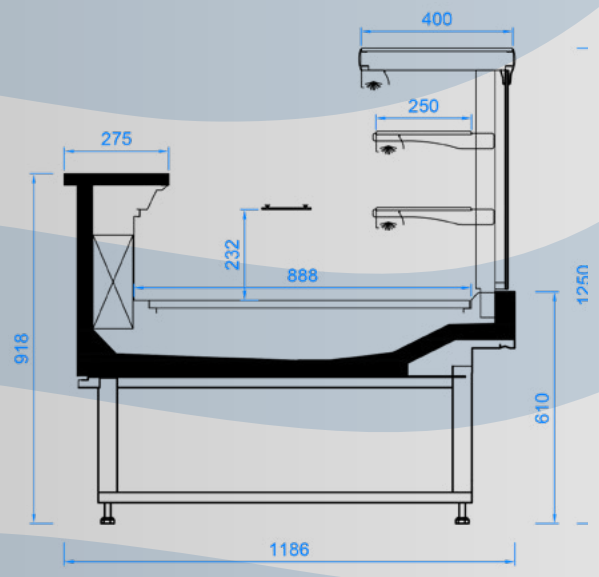

General

Lighting	T8 Tube- LED
Refrigerant	R404A / R507A R448A / R449A CO^2

Electrical Requirements (w)

Cabinet length in (Ft)	4'	6'	8'	12'
Fans - standard	72	96	108	144
Heaters	385	553	770	1155
Canopy lights	18	26	56	54
Lights per Shelf per Row	n/a	n/a	n/a	n/a

Square Glass Cake
4'/ 6' / 8' / 12'

Temperature Class & Rating
H1 = -1/+10°C
EN ISO 23953-2
Climate Class 3 25°C - 60% RH (Store Conditions)

Dimensions

Exterior Height	1250 mm
Exterior Depth	1186 mm
Shelf Depth	250 mm
Base Height	610 mm
Patch End Thickness	40 mm

Cabinet Lengths Between Ends

4'	1250 mm
6'	1875 mm
8'	2500 mm
12'	3750 mm

Refrigeration Requirements

4'	524 Watts @ -4°C
6'	786 Watts @ -4°C
8'	1045 Watts @ -4°C
12'	1571 Watts @ -4°C
Inlet Pipe	1/4"
Outlet Pipe	1/2"

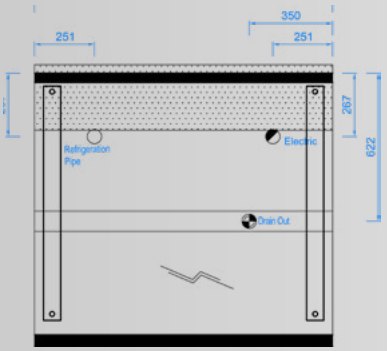

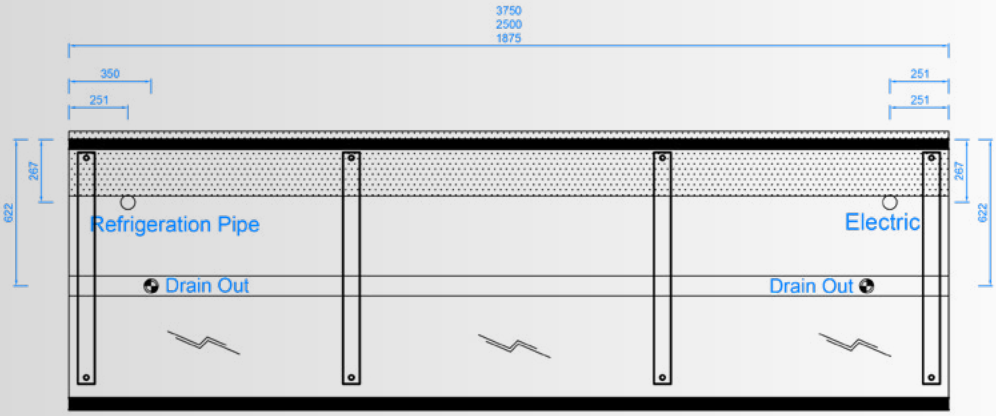

©Copyright RRC (Pty) Ltd

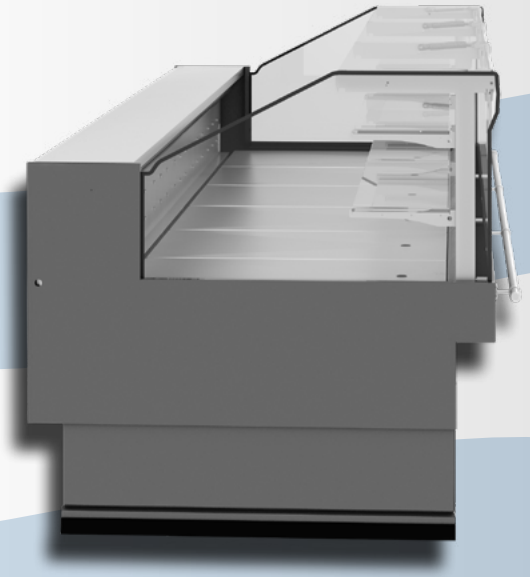

RRC
REFRIGERATED
RETAIL CABINETS

©Copyright RRC (Pty) Ltd

Square Glass Corner Wedge
(Sardis 2)

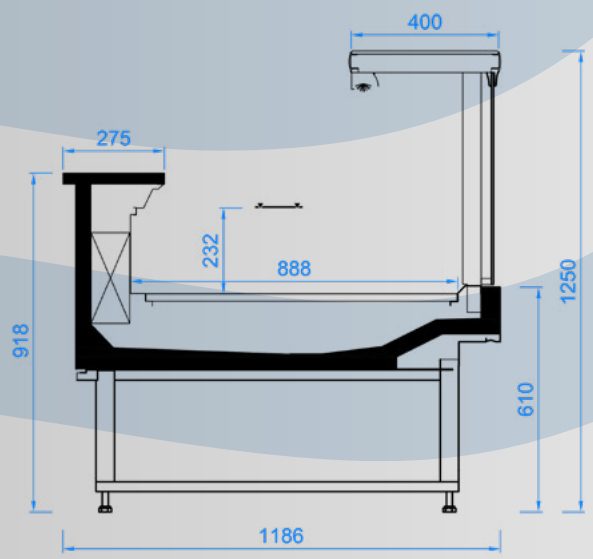

General

Lighting	T8 Tube- LED
Refrigerant	R404A / R507A R448A / R449A CO^2

Electrical Requirements (w)

Cabinet length in (Ft)	DK 90° M1	DK 90° M2
Fans - standard	108	96
Heaters	285	285
Canopy lights	18	18
Lights per Shelf per Row	n/a	n/a

Square Glass Corner Wedge 90°

Temperature Class & Rating

M1 = -1/+5°C + M2=-1/+7°C
EN ISO 23953-2

Climate Class 3	25°C - 60% RH (Store Conditions)

Dimensions

Exterior Height	1250 mm
Exterior Depth	1186 mm
Case Length	1448 mm
Base Height	610 mm
Patch End Thickness	40 mm

Refrigeration Requirements

M1 - DK 90°- Meat	Spill Over
M2- DK 90°- Deli	Spill Over

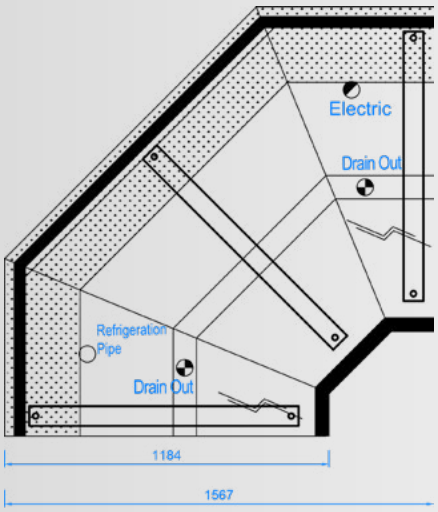

©Copyright RRC (Pty) Ltd